DEUTZ
TCD 11.5 L6

Efficient. Robust. Reliable.

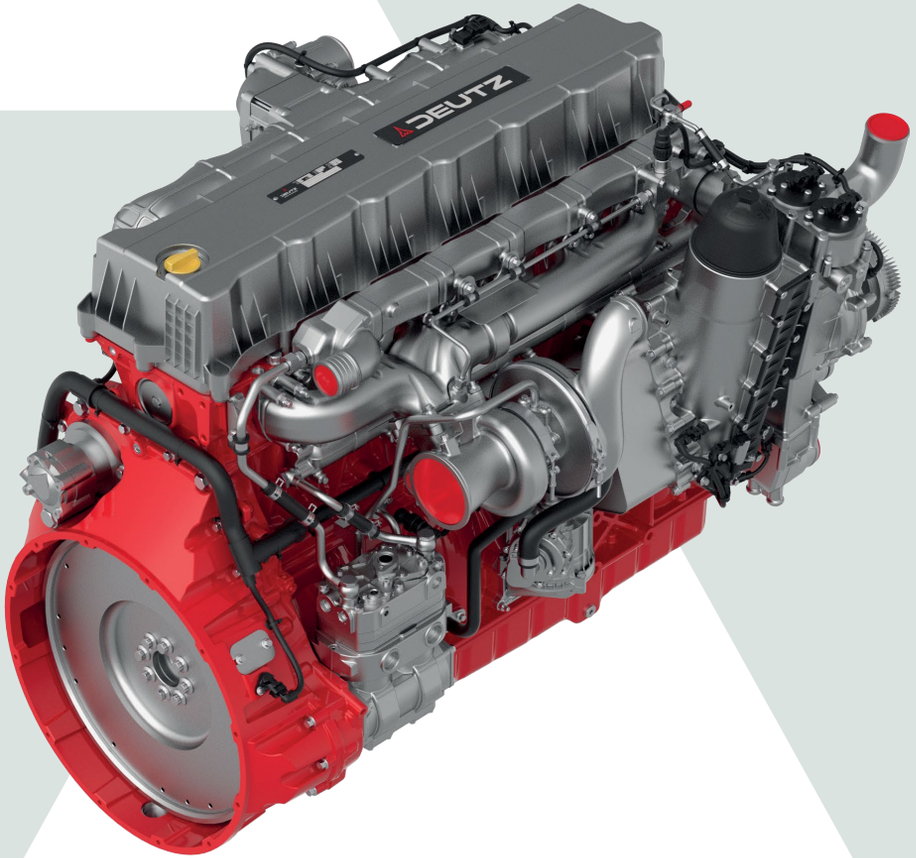

HIGHLIGHTS

- **High power density:** Up to 410 kW (1,800 rpm) and 2,400 Nm (1,000 rpm) for high-performance applications.
- **Versatile power range:** 250 to 410 kW – for a wide range of applications.
- **Low fuel consumption:** Efficient operation with ~180 g/kWh for a low TCO.
- **Global emissions capability:** Prepared for high regulated markets to support a flexible deployment worldwide (certifications: Off-Road CN V / On-Road CN VI B).
- **Long service life:** B10 T design life of 10,000 operating hours.
- **Efficient integration:** Compact and lightweight design for flexible and easy machine integration.
- **Flexible PTO capability:** Support demanding auxiliary drives.
- **Dynamic engine brake:** Improves machine control and braking performance.
- **Control Unit:** Established control unit with standard interface.

Learn more by scanning the QR code.

DEUTZ ENGINES

POWER CURVE / TORQUE CURVE

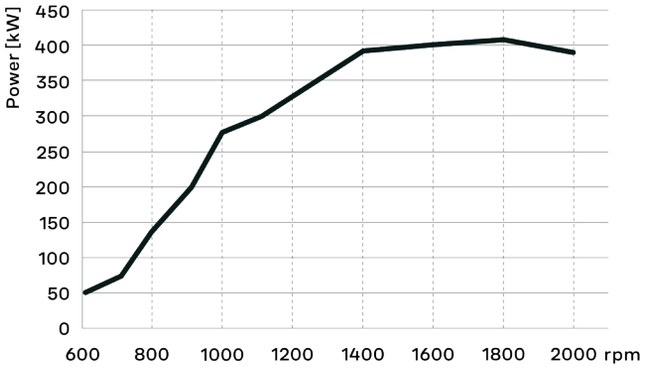

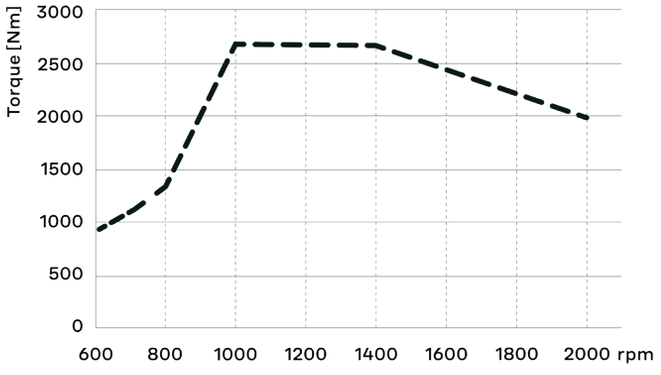



DIMENSIONS

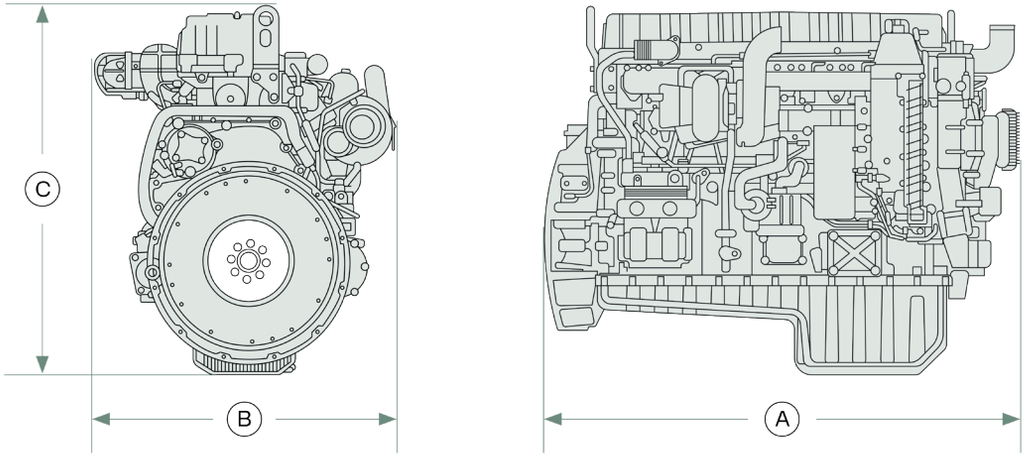

ENGINE TYPE	A	B	C
TCD 11.5 Industrial (mm)	1,350	972	1,112